The HP Indigo LEP / LEP^{X} Technology & The Future of Digital Printing

March 2020

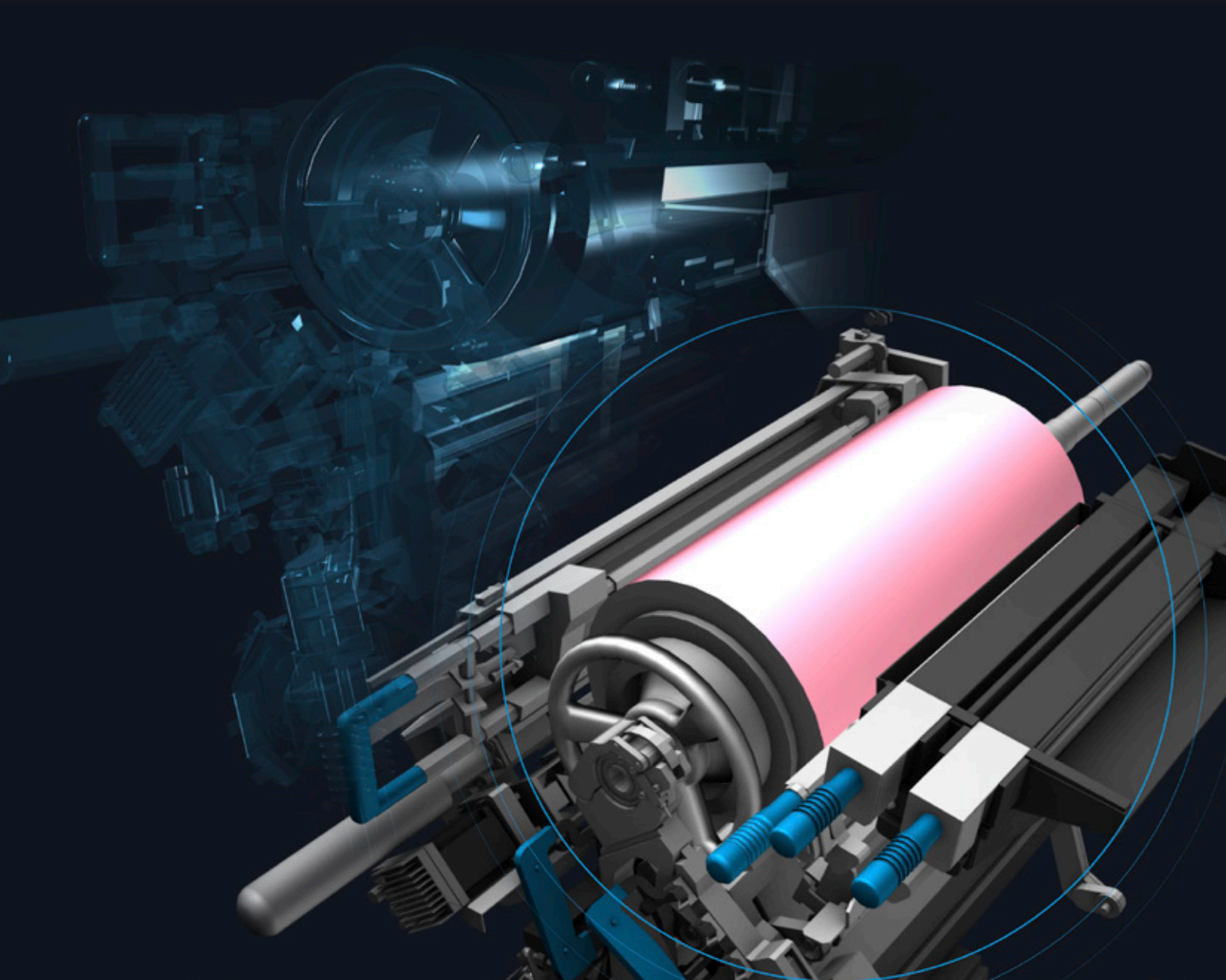

Table of contents

Executive Summary

At the heart of each HP Indigo Digital Press is HP Indigo's Liquid Electrophotography (LEP) technology. It is the essential foundation that enables HP Indigo's presses to set the standard for digital printing.

At IPEX 1993, Indigo kicked off the digital printing revolution by launching the world's first digital offset color printing press. Indigo shook the printing industry to its core. Since that time, and even after being fully acquired by HP in 2002, Indigo has gained recognition for predicting and implementing the digital transformation that would forever change the way print service providers do business. Much has changed since then: email, the Internet, digital music, streaming TV, the mobile revolution, social media and more - all go hand in hand with digital printing.

Every segment of print has been profoundly affected by the digitalization of print and this has also resulted in tremendous opportunities for print service providers (PSPs) and label and packaging converters that embrace the future with HP indigo leading the way. Each year the number of impressions printed on Indigo presses continues to grow leading to PSP success. In 2019 alone, according to estimates, HP Indigo customers printed approximately $15 billion of value[1] spanning applications in commercial, photo, labels, folding cartons, flexible packaging, web-to-print, security, brand protection and more. To date, the overwhelming majority of high value, high quality digitally printed products are printed on HP Indigo digital presses – more than all other vendors combined.

From business cards to short-run flexible packaging to labels with millions of unique and personalized designs (as in the notable 'Share a Coca Cola' campaign), HP Indigo digital presses deliver value to packaging converters, printers, brands – and consumers.

At the heart of each HP Indigo Digital Press is HP Indigo's Liquid Electrophotography (LEP) technology. It is the essential foundation that enables HP Indigo's presses to set the gold standard for digital printing.

This white paper describes the LEP digital color printing technology and why it is chosen by brands and PSPs worldwide for creating the vast majority of the high-value digital pages produced each year. We also introduce LEP^{X}, the next breakthrough in LEP, representing a force multiplier of HP Indigo's signature technology that was first announced just prior to drupa 2020.

HP Indigo digital presses with LEP technology enable customers to print a wide range of applications.

[1] HP Indigo internal reporting and analysis (Feb. 2020)

HP Indigo Liquid Electrophotography

LEP is inherently one of the most sustainable printing methods available today, letting you print shorter runs and data-driven printing jobs, that are increasingly required by print purchasers.

A Fully Proven Digital Process that Drives Value

HP Indigo's patented Liquid Electrophotography (LEP) is a fully digital printing process that prints directly from a digital print file. LEP inherently eliminates time-consuming and wasteful processes such as creating and mounting printing plates or printing thousands of unused and unsellable prints per day in the form of makeready, color corrections or overruns. As such, LEP is inherently more sustainable than conventional analog printing, letting print service providers deliver shorter runs and data-driven printing jobs that are increasingly being requested by print purchasers.

HP Indigo LEP technology uniquely delivers print quality that matches or exceeds traditional analog printing methods and lets print service providers design and print custom jobs, on demand, using variable data in which every page can be different, delivering the high-impact and consumer engagement demanded by brands and their customers.

HP Indigo ElectroInks

It all starts with HP Indigo ElectroInk, the special liquid ink used in all HP Indigo presses. This unique liquid ink contains microscopic-sized pigments that are encapsulated in a special resin forming particles that are dispersed in a carrier liquid. The particles are electrically charged to control the ink's precise placement onto a photoconductor plate.

ElectroInk Structure

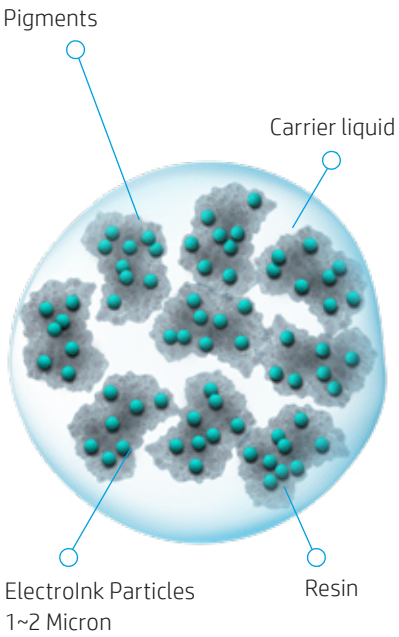

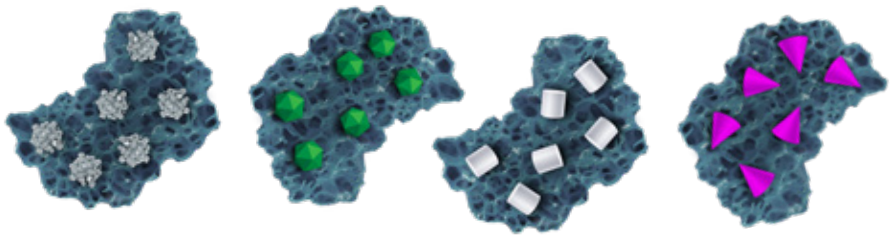

Virtually pigment-agnostic: can leverage a wide variety of pigments for a wide range of inks

Easily mixed to create off-press spot colors. No other digital printing technology today has this capability

Creates very thin ink layer, reaching highest coverage and deep color with the lowest quantity of ink

One-Shot vs. Multi-Shot Mode

LEP technology enables two modes for transferring ink to the media; One Shot mode is standard for Label and Packaging presses or continuous feed presses, whereas sheet-fed Commercial presses have the option of using One-Shot or Multi-shot mode, depending on the type of substrate being used.

In One-Shot mode, all color separations are accumulated on the blanket and then transferred to the substrate in a single pass, producing perfect registration even on the most heat-sensitive materials.

In Multi-shot mode, after a color separation is transferred from the PIP to the blanket, the image-in-progress is then transferred from the blanket directly to the to the substrate. The process is sequentially repeated until all color separations have been accumulated onto the substrate and then delivered to the output tray or positioned for duplex printing.

By encapsulating pigments in a resin, ElectroInks are virtually pigment agnostic enabling HP Indigo to create numerous inks beyond CMYKOVG, including silver ink with metal flakes and white ink using titanium dioxide, fluorescent inks and more.

For applications that require spot colors, specific PANTONE® colors can be mixed using the unique HP Indigo Ink Mixing System (IMS) from a set of 11 base inks or custom mixed in larger batches at Indigo factories for bigger projects.

HP Indigo ElectroInks are supplied in cannisters containing a concentrated paste for easy shipping and to prolong shelf life. Once a cannister is installed by the press operator, the ink is ready for use inside the HP Indigo Digital Press.

Thermal Offset Transfer

HP Indigo Liquid Electrophotography (LEP) is a thermal offset printing process in which each color separation is transferred from the reusable Photo Imaging Plate (PIP) onto a heated blanket. The heated blanket causes the pigment-carrying particles within the ElectroInk to melt and blend into a smooth film. As the warm film makes contact with the cooler substrate, it quickly solidifies and firmly adheres to the substrate with almost no change in dimension or shape. Such heating and blending of inks into a smooth thin film makes any ink-to-media interaction virtually non-existent. As such, there is great flexibility in the substrates that may be used, and all are printed with the same high HP Indigo quality and speeds.

Direct Contact Transfer

All along the LEP process, ElectroInk is transferred via direct contact. Because ink is placed directly and not jetted through the air, it maintains precise control at every step: from ink developer, to photoplate to blanket and to media. The result is very accurate ink placement even at the highest speeds.

On-the-Fly Color Switching

The unique architecture of HP Indigo digital presses gives the freedom to not only vary the order of color hits, but to also add multiple hits or passes of the same color to increase opacity or create special effects.

Enhanced Productivity Mode (EPM)

Enhanced Productivity Mode (EPM) uses only CMY inks as process colors and therefore reduces the number of color separations by eliminating the black impression delivering up to 33% higher productivity with only a modest reduction in the darkest spectrum of the color gamut. CMY printing with EPM uses less ink impressions and increases productivity by reducing the printing time.

EPM relies on a color profile that translates the black (K) separation information into the remaining ElectroInk CMY separations and generates the black color by overlapping the printed dots of cyan, magenta and yellow. The result is nearly indistinguishable from ElectroInk CMYK printing mode.

Thermal Offset Transfer

The ElectroInk transfers mechanically and maintains physical contact at each of the process: from Ink developer, to plate to blanket and media.

Step 1: Image is transferred from plate to blanket

The resin particles within the Electrolink melt, create a smoothing tacky film

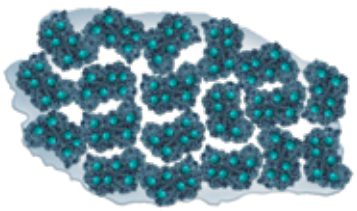

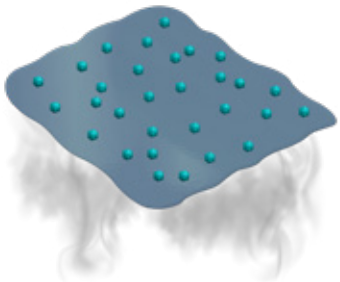

Step 2: Image is transferred to substrate

Image is transferred to the substrate as a ready dried film

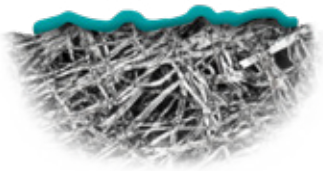

Direct Contact Transfer

Ink maintains physical contact at each step

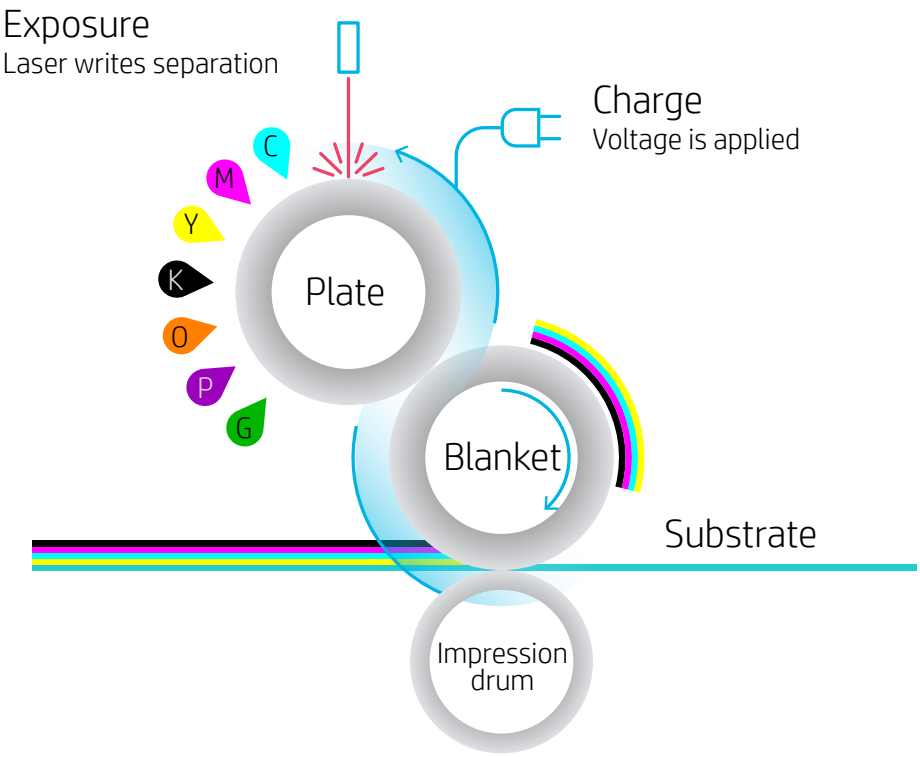

The LEP Imaging Process - Step by Step

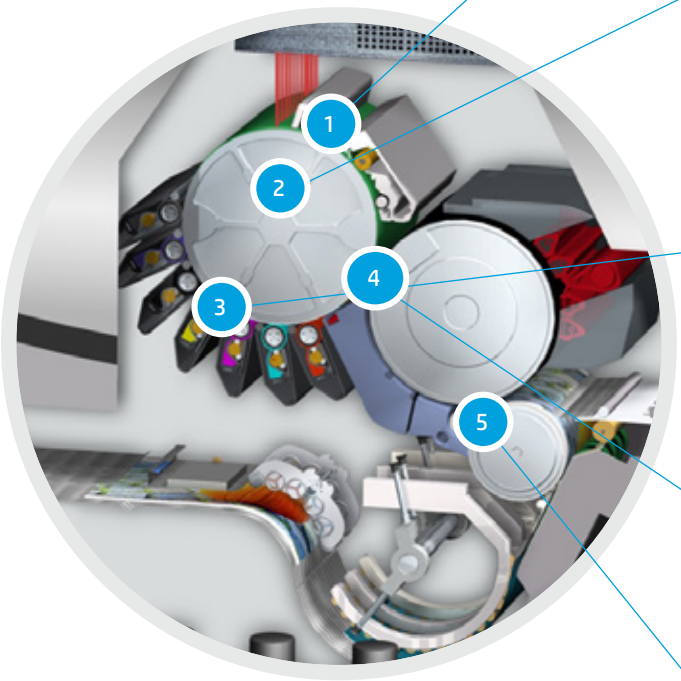

1. Photo Imaging Plate (PIP) Charging
   The first step in the imaging process is the charging of the Photo Imaging Plate (PIP), which consists of a charging station depositing a uniform static electric charge on the rotating photoconductor cylinder. This is achieved by a charge roller and the application of high voltage.

2. Laser Imaging – PIP Exposure
   As the PIP cylinder continues to rotate, it passes under a sophisticated laser imaging unit where as many as 40 laser beams in parallel expose the area to be imaged. For each color, a latent electrostatic image made up of dots is created on the surface of the photoconductor. The surface of the PIP is now carrying an invisible electrostatic charge representing the image pattern (latent image) for the current color separation being processed.

3. Binary Ink Developer (BID) Units
   Inking is performed by the Binary Ink Developer (BID) units; one BID is reserved for each ElectroInk color. The BID units prepare a thin layer of highly electrically charged ElectroInk on their roller surface. During printing, the appropriate pigment BID roller (1 of 7) engages onto the PIP cylinder. The electrical fields between the PIP and the BID while repelling it from the non-image areas, resulting in a clean and sharp inked image on the PIP.

4. Image Transfer from PIP to Blanket
   As the PIP rotates, the image layer is transferred from the PIP to the blanket through direct contact. The inked image is heated on the rotating thermal blanket, causing the ink particles in the ElectroInk to partially melt together.

5. Ink Transfer from Blanket to the Media
   As the inked image solidifies, it completely peels off and transfers from the blanket to the cooled media wrapped around the impression drum. When transfer is complete, the blanket is clean and ready to accept the next ink layer.

6. PIP Cleaning
   In the step after transferring the image to the blanket (step 4 above), the PIP rotates past a cleaning station removing any residual ink and cooling the PIP after contact with the hot blanket. At this point, the PIP surface can be recharged and is ready for the next color separation. The imaging cycle described above repeats itself for each color separation.

Watch Video

The HP Indigo Advantage

The small size of ElectroInk particles and the contact method of transfer means that stray particles are not sprayed or scattered outside the image edges and create well defined images on nearly any type of paper or plastic substrate.

Xerography/Dry toner

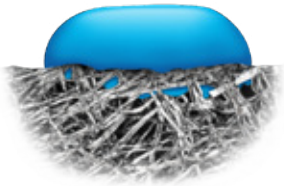

UV Inkjet

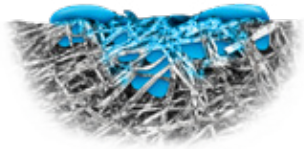

Water-based Inkjet

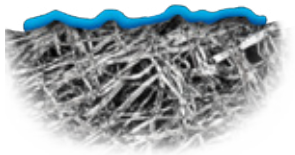

HP Indigo LEP

The Sharpest Images and Text

The extremely sharp dots created with HP ElectroInk and the LEP printing process deliver superior print quality and enable HP Indigo digital presses to print images and text with well-defined printed edges. This is particularly noticeable at the edges of halftone dots or when printing small fonts.

LEP-printed images also have contamination-free backgrounds due to the small size of the ElectroInk particles and the way ElectroInk particles are transformed on the press from ink to a printed image. Unlike inkjet and dry electrophotography (DEP), ElectroInk is not jetted or sprayed though air. Rather, a thin layer of ElectroInk adheres to the PIP and is transferred to the heated blanket where the ink particles melt and form a plastic film with strong surface tension and clean, sharp edges.

When the ElectroInk film is transferred onto paper substrates, the ElectroInk image does not soak or wick into the paper fibers. Thus, dots, linework, and text printed with HP Indigo LEP stay sharp and well defined on the surface of the substrate. The small size of ElectroInk particles and the direct contact method of transfer prevents stray particles from being sprayed or scattered outside the image edges and creates well defined images on nearly any type of paper or plastic substrate.

Print Quality and Consistency

With LEP, the positioning of every drop of ElectroInk is fully controlled and predictable from the starting point until it reaches the media, as opposed to inkjet where ink is jetted through the air. The LEP process maintains precise physical contact at every step of the process – and in this sense, it is like offset or gravure printing. The result is very accurate ink placement, leading to superior print quality even at the highest speeds.

A special capability of HP Indigo presses is the ability to print linework and fonts with nearly zero dot gain thanks to the inherent sharpness and accuracy of the ElectroInk process. Parameters for specific print jobs, such as optical density, color profiles and screen, are kept for future repeats and ensure that each job will be identical to the original regardless of the media batch or HP Indigo press used. This is difficult to achieve with lithography, or other analog print processes, which depend, to a great extent, on operator skill.

Gloss Uniformity

Due to the very small particle size of ElectroInks (1-2 microns), LEP-printed images are very thin and follow – rather than fill – the surface roughness of paper stocks. This minimizes the variations in gloss between the inked image areas and the bare paper substrate and gives a highly uniform finish that complements the underlying substrate. The result is an image with the look and feel of the highest performance analog printing technologies, accurately replicating the gloss and texture of the substrate on which it was placed.

Due to the small size of ElectroInk particles, even the finest type characters and linework stay sharp and well defined on the substrate, while also keeping the background contamination free.

Widest Media Support in Digital Printing

The extraordinary media flexibility of LEP enables the widest variety of applications on a single platform and has led HP Indigo customers to be able to answer the diverse and changing needs of today's demanding brands and high print quality customer and end users.

HP Indigo's Liquid Electrophotography is compatible with a wide variety of substrate types, surfaces and thicknesses. These include, but are not limited to paper, card stock, plastic, film, paperboard, metallic media, coated/uncoated, media for security applications as well as a wide range of substrates that comply with leading environmental and sustainability requirements.

During the LEP printing cycle, the heated blanket causes the particles within the ElectroInk to melt and blend into a smooth thin film. When it makes contact with the cooler substrate, the ElectroInk firmly adheres to the substrate with almost no change in dimension or shape. Since the image is dried and completely defined on the blanket before being transferred to the media, there is virtually no limitation to the media that may be used. There are no issues regarding ink-to-media interaction or ink-to-ink interaction which are common in nearly all other printing methods, but virtually nonexistent in LEP.

Only one formulation of HP Indigo ElectroInk is needed to print on just about any stock that the press can handle. This means that HP Indigo press users can rapidly switch between substrates without having to worry about changing inks. In general, the consumption of ink has almost no dependence on the properties of the substrate as the ink image is pre-dried on the blanket. If there is a need to print on very rough surfaces or off-the-shelf offset papers, the HP Indigo ElectroInk Primer can be used as the first "ink" to pre-treat the paper prior to printing the other colors.

The unprecedented media flexibility of LEP enables the widest variety of applications on a single platform and has led HP Indigo to be the leading technology provider for digitally printed labels.

The Largest Selection of Digital Inks

The HP Indigo ElectroInk color set for CMYK inks is the same for all applications, unlike lithography or other analog printing technologies which require many different CMYK ink formulations per substrate. With up to 7 color stations (BIDs) available on a single imaging engine, HP Indigo digital presses offer great agility in being able to add extra colors beyond CMYK to widen the color gamut. In addition, invisible inks for security and brand protection have been developed and new inks are continuously being added to the ink portfolio. HP ElectroInks are available in a wide range of colors, including:

- Standard CMYK and OVG process colors
- Orange, Violet and Green for Gamut Expansion
- Standard and high-opacity white ink
- Silver metallic ink
- Light cyan, light magenta, light black and light, light black
- Invisible yellow, blue, red (visible under UV light)
- Transparent ink for watermarks and "thermographic-like" textures
- Fluorescent pink, yellow, orange and green
- Vivid pink and green
- Fade resistant yellow, magenta and orange
- White for Sleeves
- Taggant Inks for security applications

The ability of HP Indigo presses to match offset colors enables the same job printed on HP Indigo Press to look exactly the way it would look printed on traditional offset.

High Definition Imaging and HD FM Screen

HP Indigo's high definition (HD) imaging allows customers to reach new levels of continuous tone reproduction and enhanced print quality – ideal for professional photography, high-end commercial applications and halftone text applications. HD imaging utilizes a laser writing head that doubles addressability to 1600 dpi and creates 30% smaller ink dots compared to non-HD, achieving high LPI screens of 220 and 250 LPI that offer superior image smoothness and quality.

The HP Indigo HDFM screen is a stochastic screen which creates very high image detail. Supported by the HD laser writing head, sending 40 beams instead of the usual 28 and 30% faster, HD FM screening accurately places ink dots in random-like distribution, resulting in smoother flesh tones, finer details, increased sharpness and the elimination of rosette patterns and moirés. HP Indigo HD FM leverages ElectroInks Light Cyan and Light Magenta to enhance print quality and is well suited for the most demanding high-end applications.

Color That Lasts 200 Years or More

The encapsulation of the pigment sub-particles within the ElectroInk plastic resin helps preserve the chemical properties of the pigments against oxidation, humidity and strong ultraviolet daylight conditions. The durability of LEP-printed ElectroInk images prevents fading or deepening and is superior to conventional offset printing.

In testing conducted by Wilhelm Imaging Research (WIR), HP Indigo prints exceeded or matched the display image permanence ratings of the best-rated silver halide product. Photo consumers today seek alternatives to photo printing with silver halide chemicals. The WIR testing also validated the album permanence of HP Indigo photobook pages, which received the highest possible dark permanence rating of > 200 years. In comparison, the WIR gave all the silver halide photos a much lower album/dark storage rating of greater than 100 years.

As in most printing technologies, common pigments tend to fade when UV radiation interacts with ink colorants. For labels, packaging or prints that will be outdoors under high UV conditions, HP Indigo's Fade Resistant inks are made with a special formulation to enable color lightfastness under such conditions, reaching a Blue-Wool Scale of 6-7.

Color Matching and Beyond

The ability of HP Indigo presses to match offset and other analog colors enables the same job printed on an HP Indigo Press to look exactly the way it would look printed on traditional high-end analog processes such as offset and gravure. Thus, print providers can select a printing press for a given job based on business reasons with full confidence it is the highest print quality possible. Shorter runs can also be offloaded from analog presses to HP Indigo digital presses where there are no traditional setup costs and turnaround times for smaller jobs are significantly faster.

LEP and HP Indigo Digital Presses comply with the ISO 12647-2 color specification and have received GRACoL proofing and Fogra production certification for their color print accuracy.

HP Indigo is also a PANTONE®-licensed 6- and 7-color on-press solution in digital printing. It supports PANTONE PLUS®, PANTONE MATCHING SYSTEM®, and PANTONE Goe™ color simulations. With ElectroInks CMYK+OVG (orange, violet and green), customers can achieve highly accurate PANTONE emulations on-press automatically, eliminating the need for special ink preparation, replacement and wash-ups. For applications that require other brand-specific spot colors, customers can pre-mix inks off-press and reach up to 97% of the PANTONE book.

The HP Indigo Ink Mixing System (IMS) offers the ability to mix a wide range of special colors from a set of 11 base inks – a unique capability among digital printing technologies. The custom-prepared ink can occupy any one of the ink stations resulting in several benefits. Besides achieving the exact desired color, during printing – a pre-mixed color requires fewer printing impressions, eliminating the need to achieve the color through combinations of CMYKOVG hits of color and therefore economizes on printing time and cost. HP Indigo also offers custom color ink mixing as a service to its customers for larger projects.

Applications printed with HP Indigo LEP technology can be immediately finished after printing, without the use of energy-consuming drying s ystems or a natural drying time of several hours.

Advanced Color Management

HP Indigo presses are complemented with a suite of integrated tools designed to simplify and automate color management processes to ensure exceptional color accuracy without laborious manual calibrations. HP Indigo presses are built to ensure that color quality and output always remain consistent and repeatable over time, across different presses and different sites so that customers can satisfy the demands of color-critical clients and global brands, while achieving the fastest time to color.

HP Indigo presses are equipped with a built-in spectrophotometer used for matching target colors, creating substrate profiles, color monitoring and calibration. Media Fingerprints can be saved and shared between presses and sites to ensure consistent output regardless of where or when the job is printed. Other examples of how the Indigo LEP printing technology and spectrophotometer work in concert to allow excellent color reproduction include:

- Continuous Color Calibration - monitors color and adjusts throughout a run, assuring optimal press performance.
- PrintOS Color Beat - scores the color accuracy of a run, in a rapid and automated way and then shared via the cloud, providing confidence to print buyers that the job was produced according to spec.
- Spot Master - provides an automated workflow to match customer spot colors uniformly over an entire page, quickly, easily and without waste.1.5

Managing color involves constantly measuring, monitoring and calibrating to compensate for any variations in press conditions and through press calibration, return to a baseline that was initially established on the press to match the desired color target. By automating these functions, color accuracy is simplified for operators and is consistently achieved without compromise on print quality or press productivity.

In 2020, HP Indigo was the first vendor certified by Idealliance® to enable customers to digitally, apply and certify for G7® AI Master Facility Qualification for their digital printing presses. With Idealliance's certification, HP Indigo customers can confidently achieve G7® Master Qualification requirements and maintain G7 target conditions, day after day, automatically through a streamlined, cloud-based digital process to assure and certify color consistency.

Immediate Handling and Finishing

Applications printed with HP Indigo LEP technology can be immediately finished after printing, without the use of energy-consuming drying systems or a natural drying time of several hours. This enables many finishing processes such as UV or water-based varnishing, embellishments or embossing to be performed inline, even on high-coverage applications. Lamination of thin plastic films over the printed stock can be done in the conventional way, using a variety of solvent-born, water-based, UV-based or solvent-free adhesives without causing image degradation.

Design with the Environment in Mind

HP Indigo continues to innovate and advance its widely proven Liquid Electrophotography and related technologies with a focus on reducing impact on the environment. With day-to-day operations tightly focused on a circular and low-carbon economy that spans the value chain, HP Indigo is dedicated to creating value for customers, lowering waste, increasing productivity and reducing the carbon footprint of printing.

Sustainability credentials include the Green Leaf mark and certification from TUV Austria's "OK Compost" verifying HP Indigo ElectroInks can be used as printing inks for packaging and are recoverable through composting and biodegradation in accordance with leading standards. In addition, HP indigo ElectroInks comply with leading food packaging regulations (US FDA and European EU Food Legislation) and are free of UV-reactive chemistries. All Indigo presses are manufactured carbon neutral.

Comparison Chart: LEP vs. Other Printing Technologies

	Inkjet	Dry Toner Electrophotography (DEP)
Print Quality	Due to spraying or jetting of ink print quality may be affected by: • Ink wicking or soaking into the paper fibers diluting the image color and reducing edge sharpness • Ink coverage limitations • Background contamination from stray dots • White spaces and streaks caused by clogged nozzles (a common inkjet ailment) • UV inkjet, has a thick ink layer affecting gloss or result in create cracks on thin substrates	While both HP Indigo LEP and DEP toners don't penetrate the paper, DEP offers inferior edge definition due to its large particle size where stray toner particles can more easily be scattered outside the image edges, regardless of the substrate type.
Inks/Toner	Ink development for inkjet is complex and is not pigment-agnostic like HP Indigo ElectroInks, resulting in: • Limited selection of inks • Lack of off-press spot colors	Even the finest DEP color toner contains pigment particles that are 5 to 9 microns in size. Since powder toner particles are so large, they create thick images that fill the surface and obscure the beauty of the surface texture of the paper. In addition, the gloss of powder toner images contrasts with the gloss of the paper and this non-uniformity is usually perceived as poor- quality printing.
Substrates	Water-based Inkjet requires that liquid be evaporated from the media and this can narrow the substrate range. Water can cause warping, especially with thin media. Since water cannot be absorbed by synthetic materials, printing on synthetic media is difficult or impossible Depending on the media, pigments may sink below the media's surface resulting in reduced saturation. Very absorbent papers can increase ink consumption by up to 50% to achieve the required color (as opposed to LEP where ink consumption has almost no dependence on the substrate properties.) With UV injet, the thin ink layers limit usage on thin substrates.	DEP technology is heavily dependent on the electrostatic properties of the paper substrate, and small changes in the environmental relative humidity can significantly degrade print quality. Furthermore, the high fusing temperature needed for DEP strictly limits the coated paper stock or plastic films that can be used. Also, fusing on thicker substrates typically requires DEP printers to slow production speed down to increase the time the fusing station is in contact with the substrate to produce an adequate bond.

LEP^{X}: The Future of Digital Printing

High-quality digital printing at analog speed has always been the holy grail in the print Industry. As consumers' tastes and lifestyles continue to change, brands are responding with more attractive packaging in a larger variety of sizes and run lengths.

HP Indigo's new LEP^{X} technology delivers HP Indigo digital print quality and versatility at analog print speeds, enabling PSPs to better serve the needs of their brands with just-in-time production of jobs of any run length. LEP^{X} offers the speed and operational efficiencies to enable print providers to profitably produce many more jobs per day with variable graphics and content, reduced labor costs and less waste.

LEP^{X} is based on HP Indigo's core LEP printing process which runs at a process speed of up to 180 meters/minute (590 fpm). LEP^{X} uses the same HP Indigo ElectroInks and the same BIDs but introduces some significant technical innovations to achieve up to 5 times higher throughput and productivity that is virtually independent of the number of color separations.

Importantly, the increased throughput of the LEP^{X} printing process does not compromise on any of HP Indigo's signature advantages:

- Print quality and color consistency
- Ink and substrate versatility
- Gloss uniformity & texture matching
- Offset color matching
- Edge sharpness
- On-the-fly color switching
- High-coverage printing
- Variable data

The most significant innovation with LEP^{X} is the use of multiple impression engines to print each color separation simultaneously, dramatically increasing throughput.

Groundbreaking Digital Architecture

LEP^{X} introduces several important innovations to the LEP printing process. The most significant is a new architecture that supports up to six imaging engines to print the color separations in parallel rather than in sequence. This configuration enables printing full graphics at the full process speed (120 meters/minute), dramatically increasing throughput.

With LEP^{X}, each imaging engine currently supports two Binary Ink Developers (BIDs). Thus, an LEP^{X} configuration with 6 imaging engines and 2 BIDs can support 12 on-press inks. (In comparison, traditional LEP has one imaging engine that supports up to 7 BIDS). Adding additional inks or frequently used custom spot colors can widen the color gamut or precisely reach a process brand color, while the same color on multiple stations of the same color can increase opacity or create special effects.

With the LEP^{X} architecture, operators can run any job at a single known speed, regardless of graphics, ink coverage or specialty colors and change inks on-the-fly with any of the 12 on-press ink stations.

Other key LEP^{X} innovations include a new array of high-resolution LEDs; substituting the laser scanning unit writing head. The Photo Imaging Plate (PIP) was replaced with a durable Photo Imaging Drum (PID); and the transfer blanket was replaced with a several meter-long blanket belt.

In March 2020, LEP^{X} was first introduced to the market with the announcement of the HP Indigo V12 Digital Press for the narrow label market using 6 imaging engines that support 2 colors each, delivering analog-like print speeds coupled with Indigo agility.

LEP^{X} Configuration

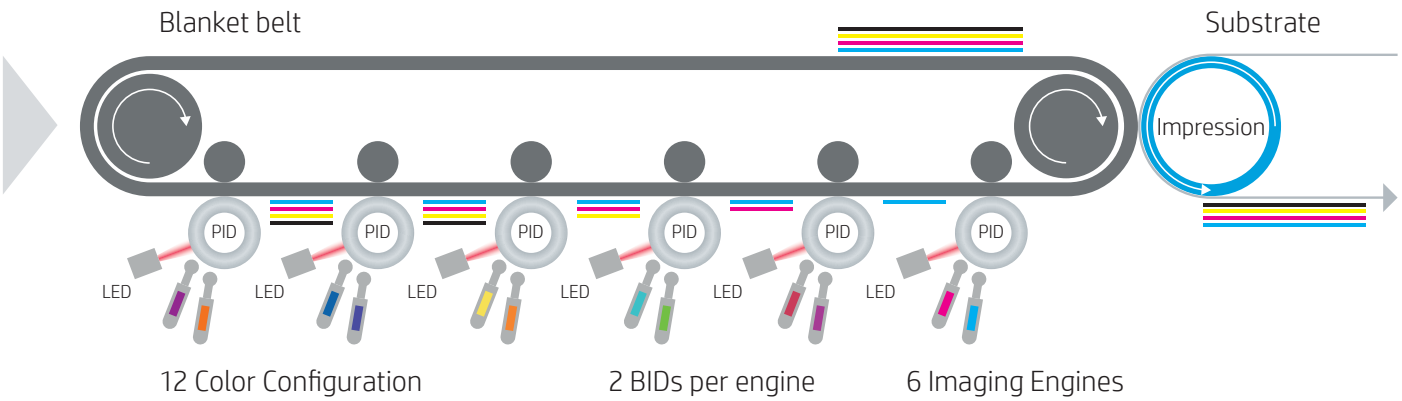

Inline architecture concept:

up to 6 colors ⟶ one blanket rotation (120 m/min; 400 fpm)

12 colors ⟶ 2 blanket rotations (60 m/min; 200 fpm)

The LEP^{X} Imaging Process - Step by Step

1. The Charging Unit generates a uniform electrostatic charge on the first rotating electrophotographic Photo Imaging Drum (PID).

2. The Photo Imaging Drum (PID) is exposed by a cluster of LEDs with more than 20,000 diodes that remove the charges from the image area. The diodes are controlled by the raster image processor which converts instructions from a digital file into power instructions.

3. A Binary Ink Developer (BID) unit, representing one color separation, prepares a thin film of highly electrically charged ElectroInk on its roller surface. The ink is attracted from the BID roller to the PID image area and repelled from the non-image areas. Currently, with LEP^{X}, there are two BIDs per imaging engine.

4. Steps 1-3 are performed in parallel by each imaging engine i.e. 6 imaging engines, at once.

5. As the heated transfer belt/blanket passes by each imaging engine, the inked image of each color separation is transferred to the blanket. Any residual ink and electrical charge are removed from the PID and cooled.

6. Upon transfer, the resin particles of each ink color separation image are melted by the heated blanket and form a tacky film of the image comprising all color separations. Each color separation is added over the previous color separation. This is how the Indigo One-Shot process accumulates multiple separations on the blanket.

7. The completed image film is transferred to the substrate on the impression drum.

LEP^{X} Building Blocks

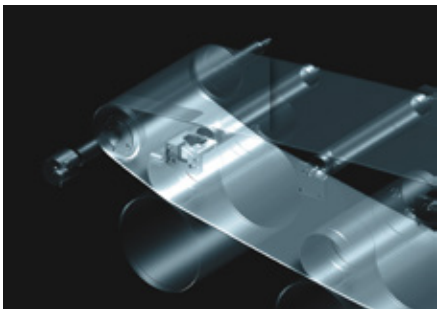

Blanket Belt

- Uses HP Indigo current body and top release technologies
- Opens new opportunities for extended lifespan

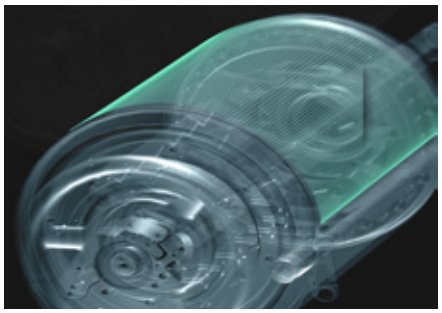

Photoconductor Imaging Drum

- ~100x longer life span- enables multiple engine high speed productivity
- Supports continues (Infinite frame) printing

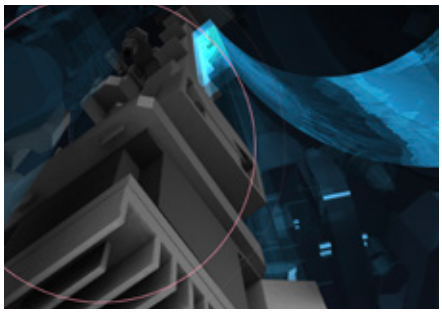

LED Print Head

- Moving from LSU to Fixed array LED
- HD Imaging – 1600dpi
- Lower mechanical sensitivity to vibration
- High Reliability (no moving parts, LEDs)

Comparing LEP and LEP^{X}

Technology	LEP	LEP^{X}
Imaging Engines	1	Up to 6
BID's per engine (max.)	Up to 7	2
Number of on-press inks	Up to 7	Up to 12
Photo Imaging Mechanism	Plate	Drum
Blanket Type	Sheet on drum	Belt
Ink-set	ElectroInk	ElectroInk
Print method	Indirect (digital thermal offset)	Indirect (digital thermal offset)
Laser source	Indirect (digital thermal offset)	LEDs

HP Indigo Commercial Digital Press Portfolio

NEW | Ser 3

HP Indigo 7K

NEW | Ser 3

HP Indigo 7eco

HP Indigo 7r

A3

NEW | Ser 5

HP Indigo 100K

NEW | Ser 4

HP Indigo 15K/ 15K HD

HP Indigo 12000/ 12000 HD

B2

HP Indigo 50000

NEW | Ser 4

HP Indigo 90K

HP Indigo WS6800p

Web

HP Indigo Labels & Packaging Digital Press Portfolio

Enabling the Digital Label Factory of the future

HP Indigo 6K

HP Indigo 8K

HP Indigo 25K

FC & FP converters will continue changing the packaging market

HP Indigo 35K

HP Indigo 90K

HP Indigo 25K

HP Indigo 15K

Continuous Innovation

From drupa 2016 to drupa 2020, HP indigo has invested more than $500 million in R&D with an unprecedented number of technological breakthroughs that were announced in advance of drupa 2020, with the unveiling of two new press series added to the Indigo portfolio.

Key developments and product milestones over the years include the Series 2 sheet-fed and web-fed digital presses (1998); Series 3 presses with a 70% improvement in productivity (2008); Series 4 with B2 format presses (2012);

The PrintOS cloud-based press management system (2016) and AI-driven PrintOS^{X} (2020); Series 5 alongside the launch of the B2 HP Indigo 100K digital press and the first in the series offering 6,000 sheets per hour, 30% increase in process speed and 50% overall greater productivity (2020); Series 6 with the HP Indigo V12 Digital Press, first announced at drupa 2020 as the initial press built with LEP^{X} innovations and poised to disrupt the label market ecosystem by making significant production volumes, currently produced conventionally, and now addressable with an Indigo solution.

LEP, LEP^{X} and many other innovations are the cornerstones to future HP Indigo solutions for the labels, packaging, commercial and photo segments and will continue to unlock new zones of opportunity for print service providers that will carry them into the next chapter of digital printing.

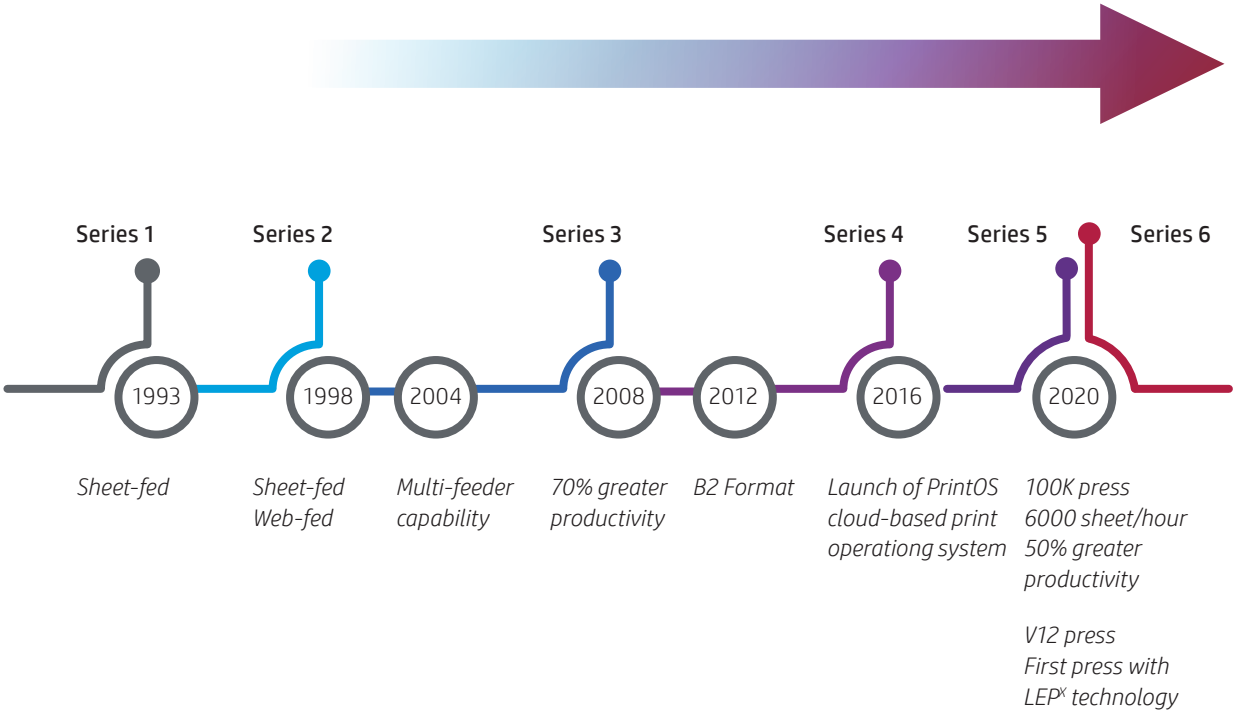

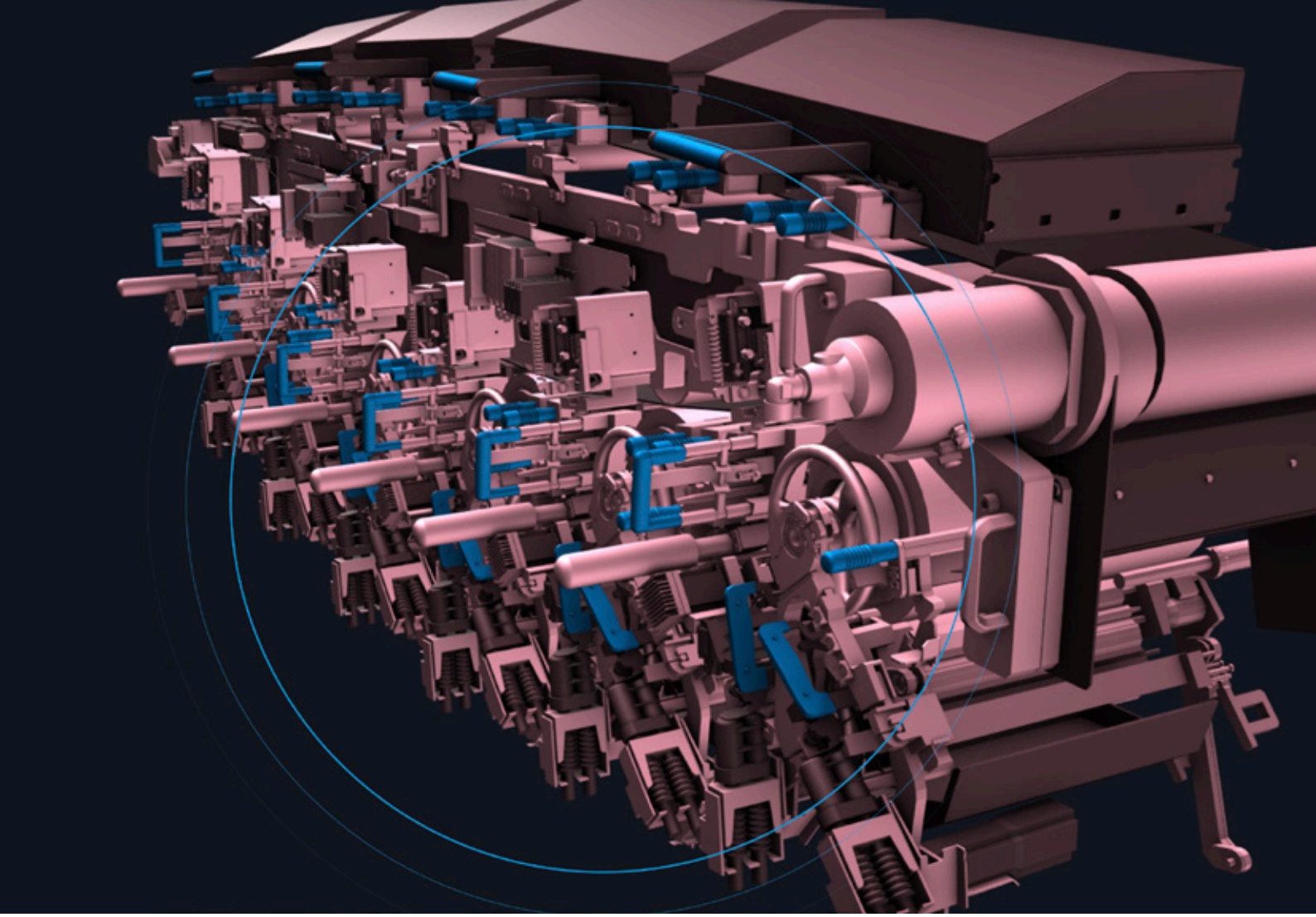

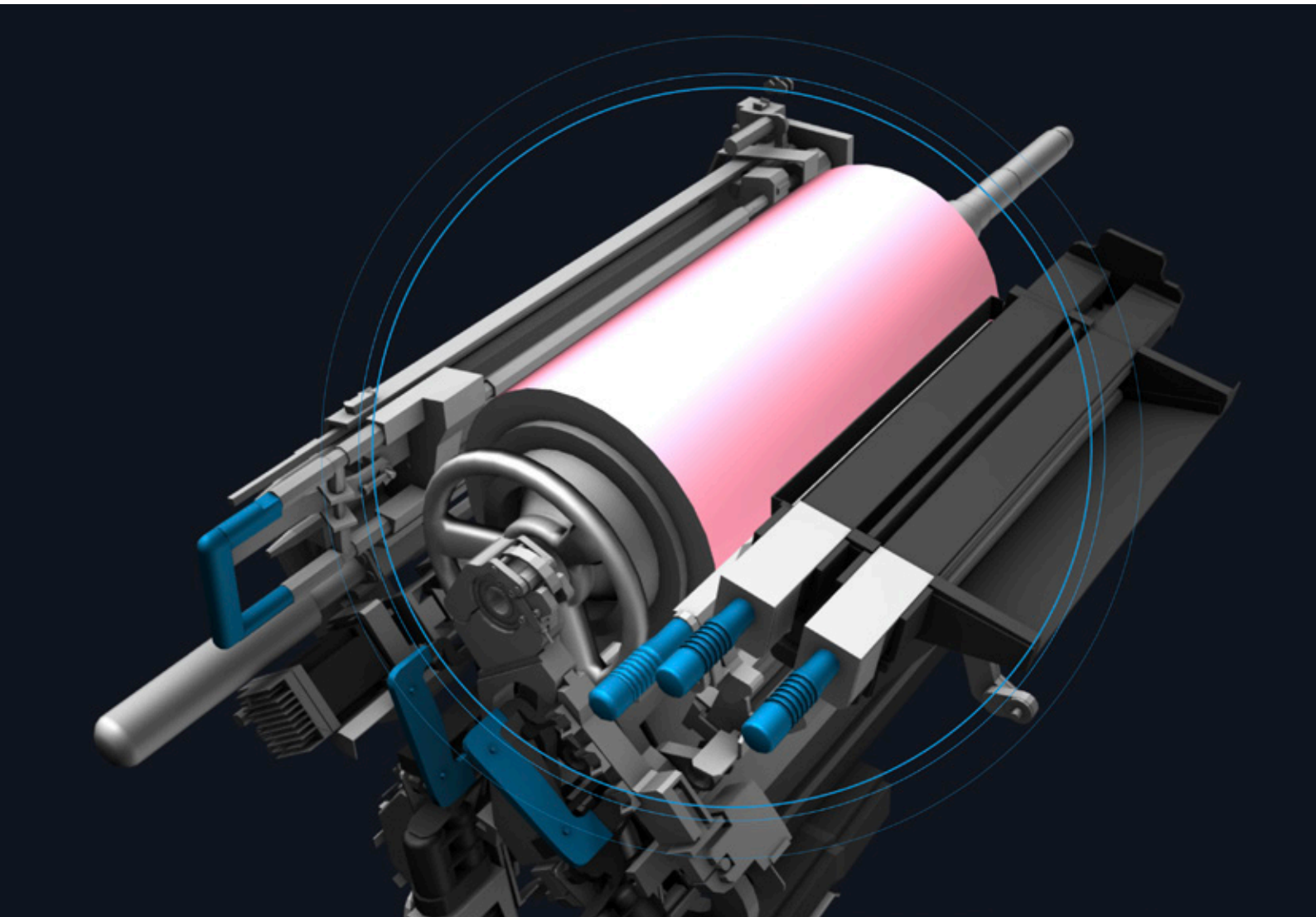

Learn more at
hp.com/go/indigo

March 2020, 4AA7-7174ENE